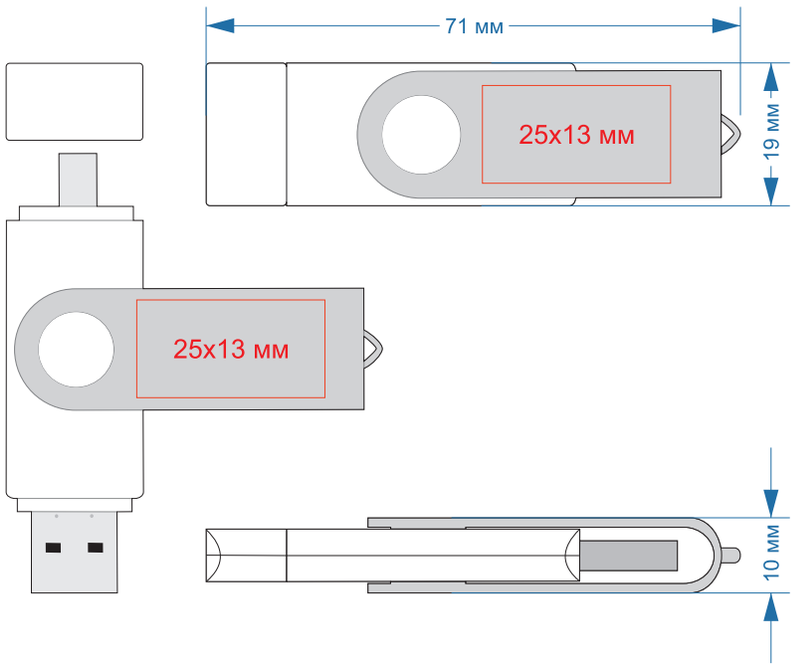# OTG001